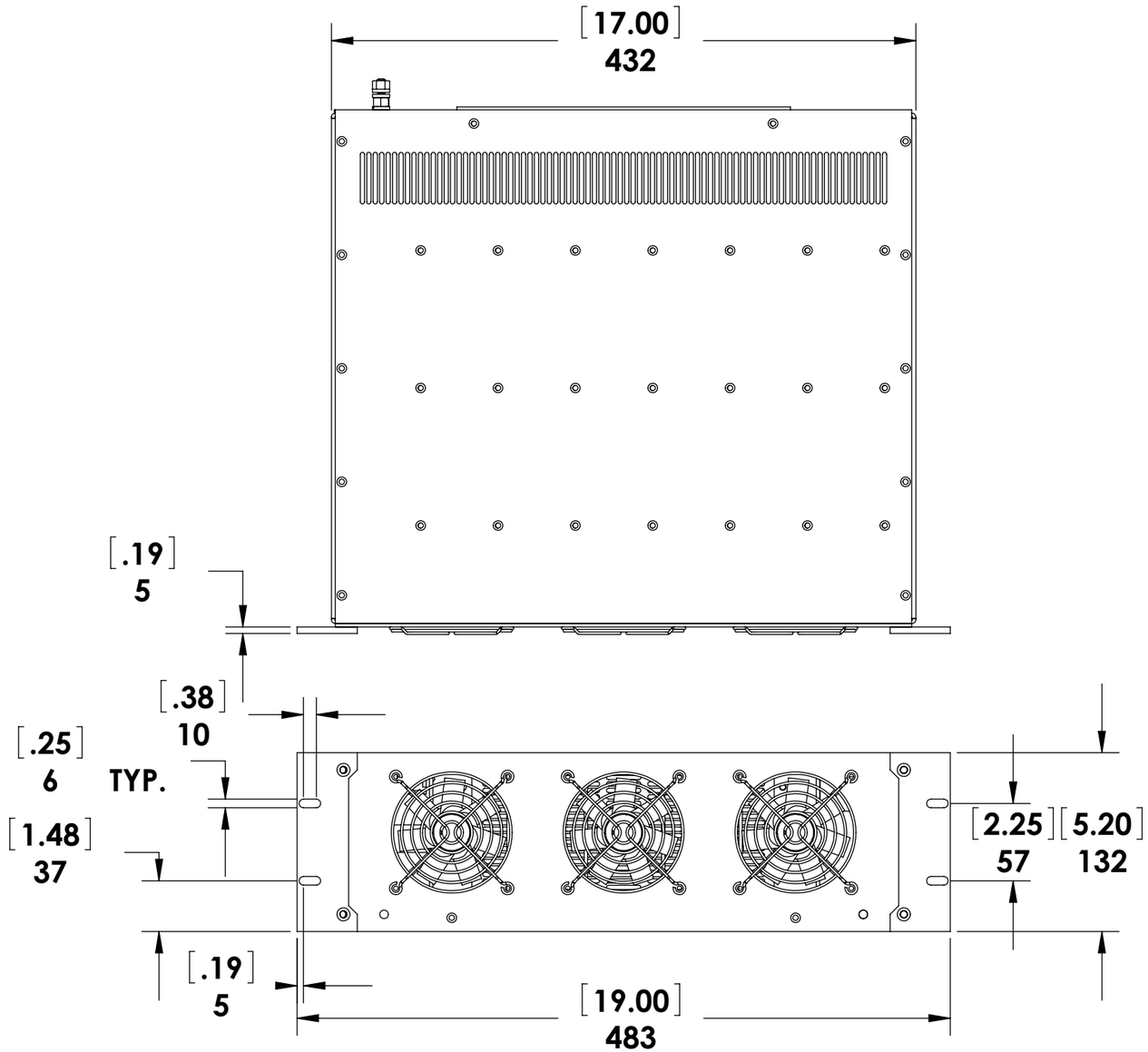

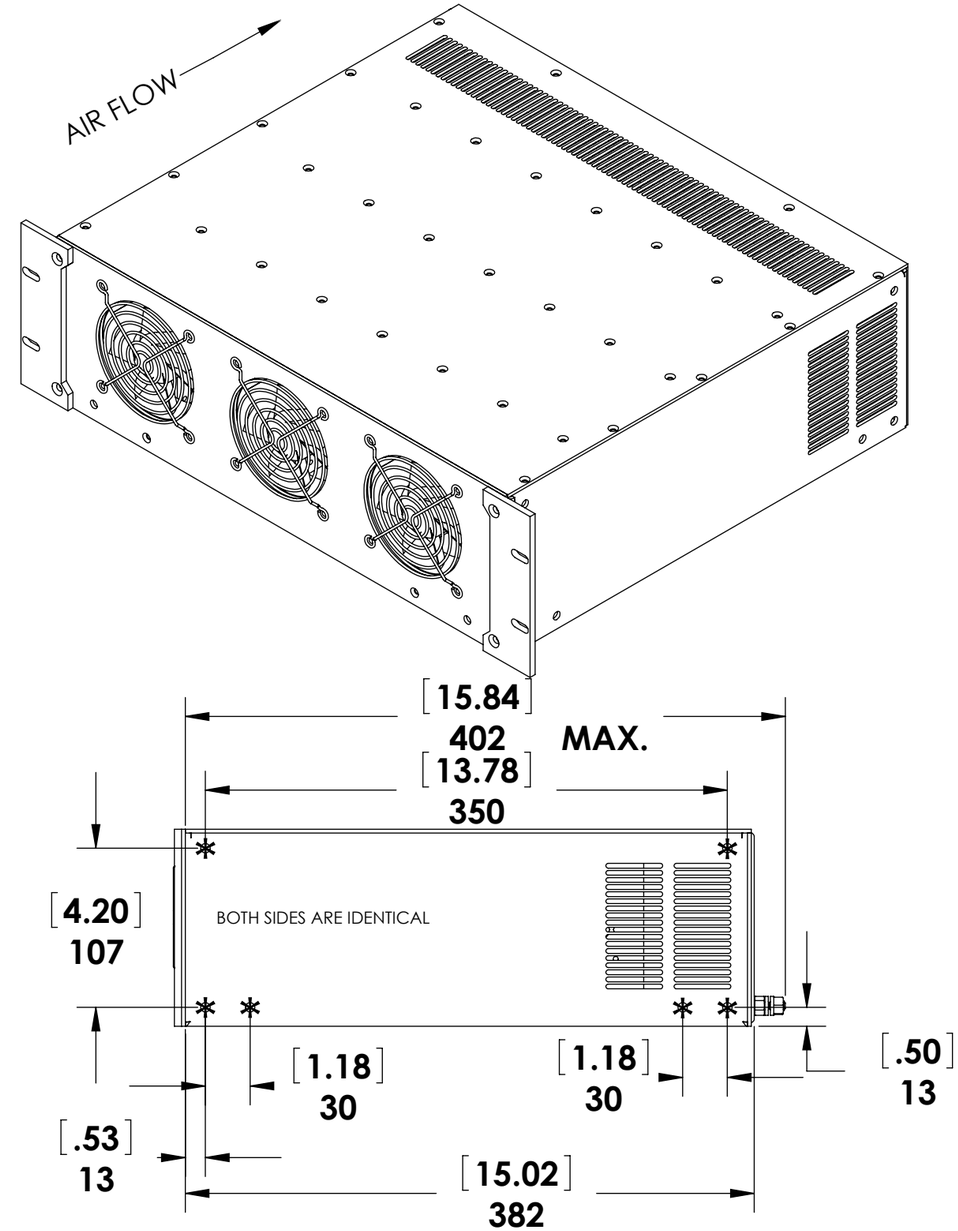

*
M5 Threaded inserts for mounting brackets or
for other mounting options
Maximum screw penetration is 10mm
from outside surface of chassis

REV	DESCRIPTION:	DATE
A	NEW ISSUE	04/11/2014

EDGES & HOLES DEBURRED
SURFACES FREE OF SCRATCHES

DIMENSIONS ARE IN INCHES
TOLERANCES ON
DECIMALS: XXX ± 0.008"
XX ± 0.012"
ANGLES: ± 2°
FRACTIONS: ± 1/64"
UNLESS OTHERWISE STATED

Title: OUTLINE DRAWING				MDS POWER
Part of: 3U7 19" RACKMOUNT ENCLOSURE				Date: NOV.04, 2014
Drawn by: J.X.	Checked by:	Approved by:	Revision:	Drawing No: ODR XXXXXX